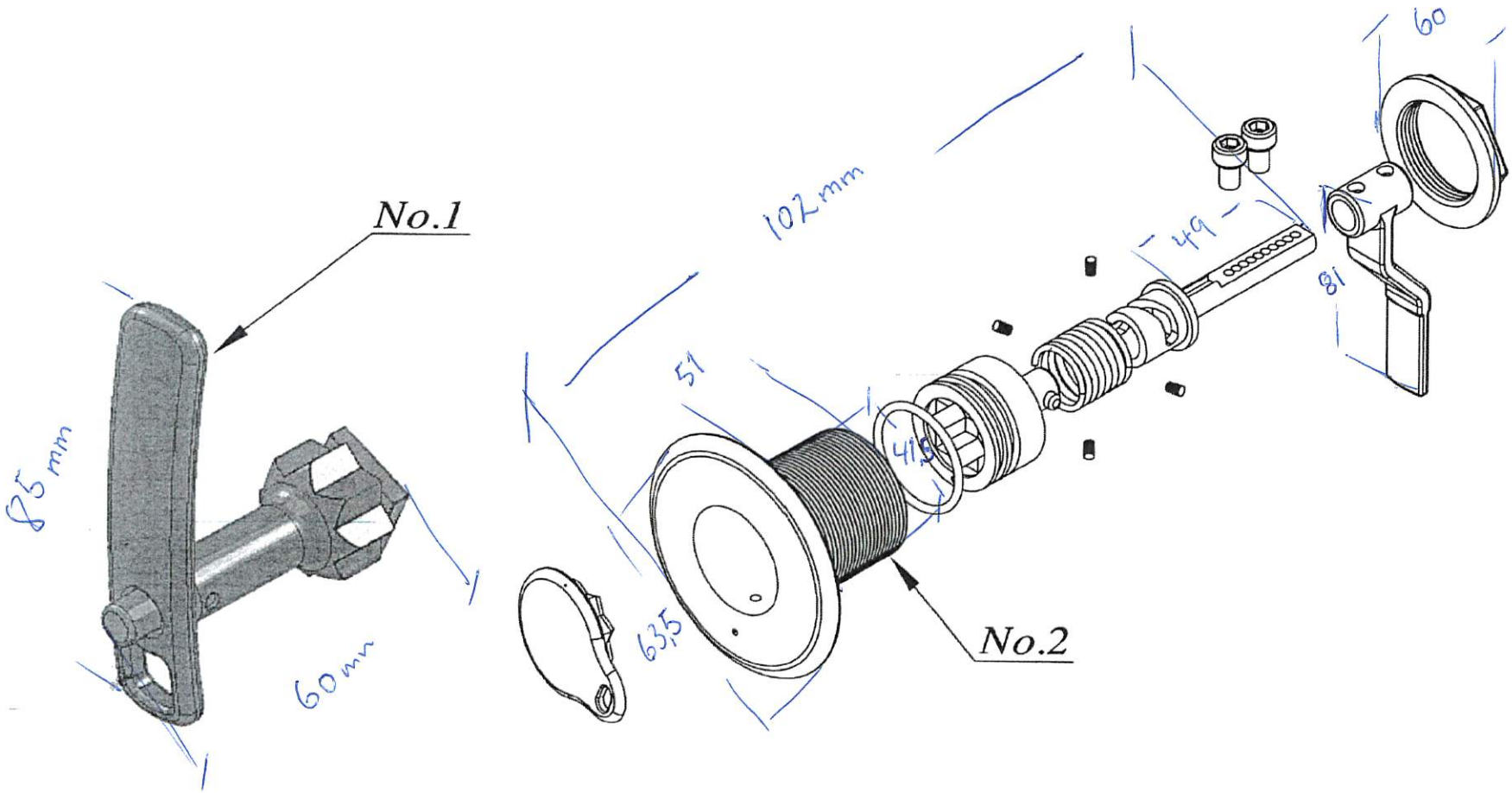
No.1
85 mm
60 mm
102 mm
51
63,5
41,5
No.2
49
81
60